SHARP
PRECISION MACHINE TOOLS

Sharp Industries, Inc.
3501 Challenger Street
Torrance, CA 90503
Tel: 310-370-5990 Fax: 310-542-6162
Email: info@sharp-industries.com
Parts: parts@sharp-industries.com
Sales: sales@sharp-industries.com
Support: support@sharp-industries.com
www.sharp-industries.com

SHARP M SERIES
HEAVY DUTY HOLLOW SPINDLE LATHE

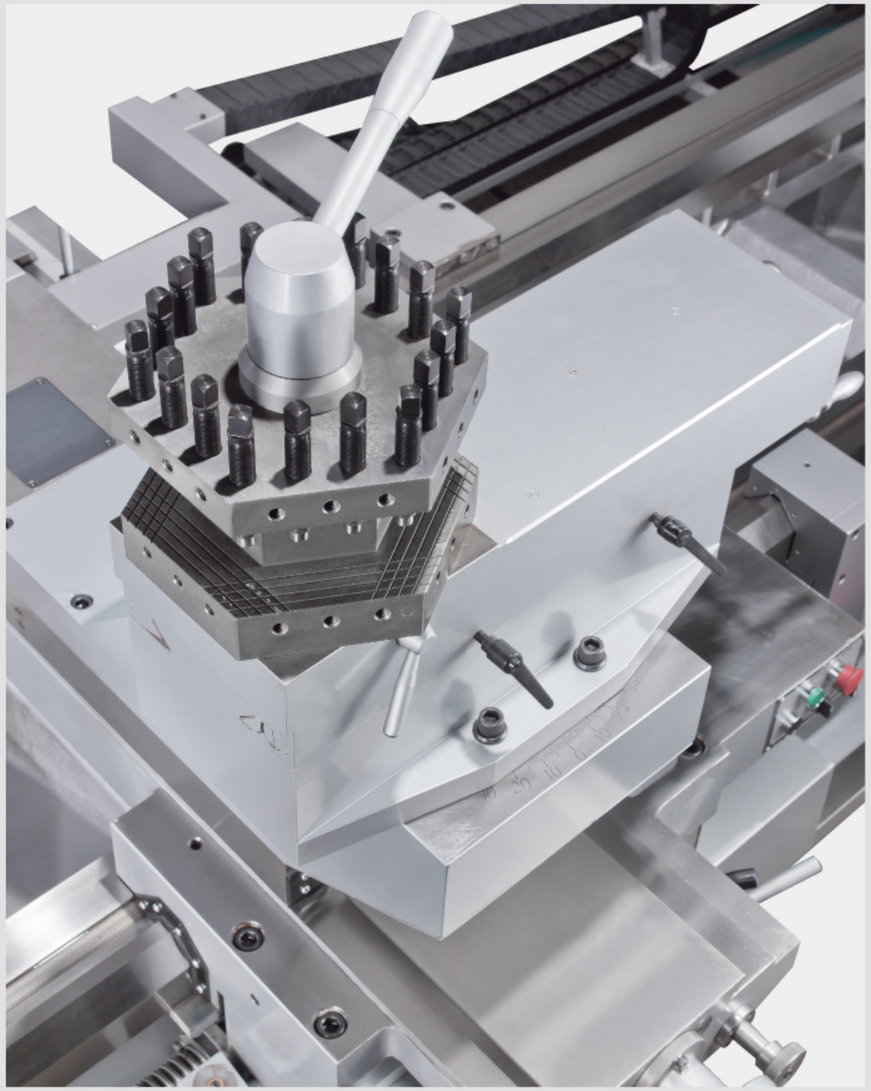

SHARP
PRECISION MACHINE TOOLS

SHARP M SERIES
HEAVY DUTY HOLLOW SPINDLE LATHE

SWING: 40", 50", 60", 70", 80"
CENTER: 60" ~ 315"
SPINDLE: 6", 9", 12"
MOTOR: 30 HP, 40 HP, 50 HP

- Large oil pipe work
- Aerospace large parts
- Heavy shaft turning
- Heavy duty steel rod

- The machine base is a one piece, high grade Meehanite casting, normalized and aged to achieve maximum stability.
- Extra 3rd way support on the front of the bed provides additional stability to the carriage upon extreme heavy cutting conditions.
- Adjustable electro-magnetic brake system for precise braking motion.

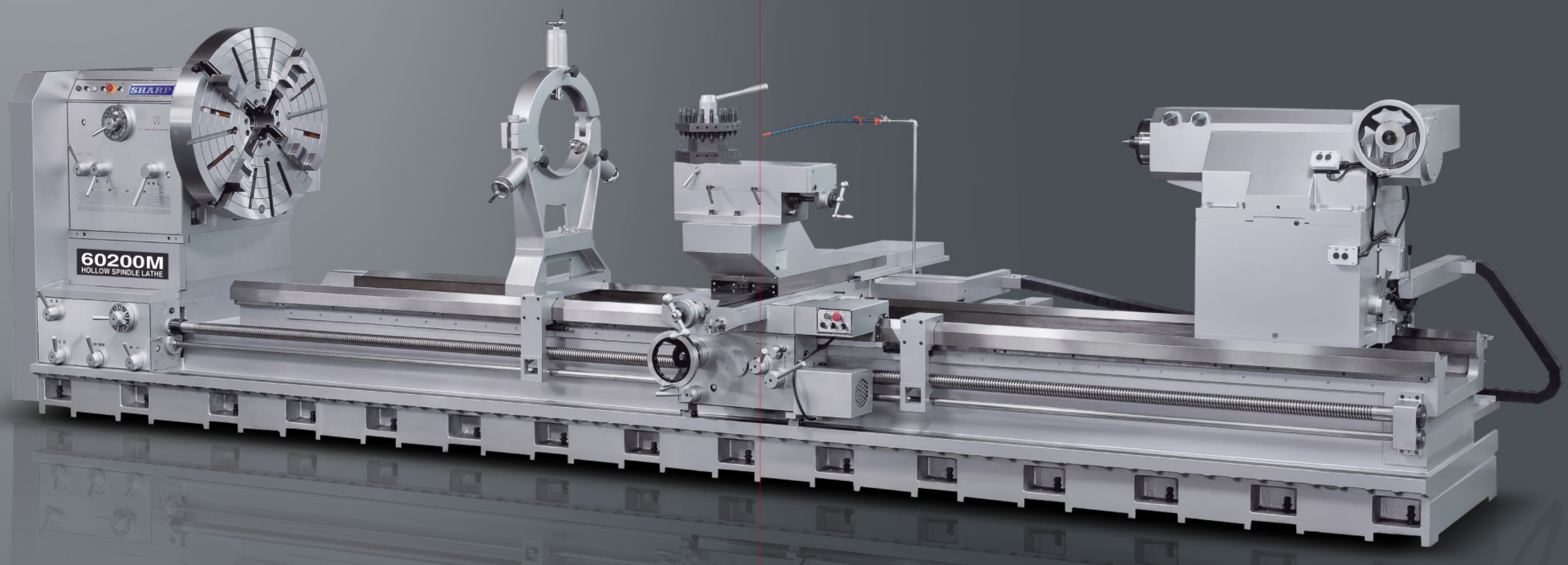

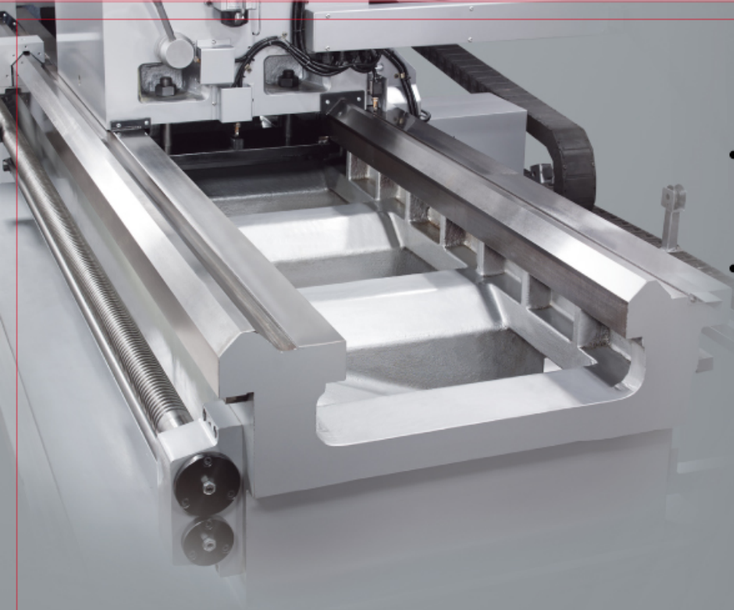

- The oversized 24" or 32" wide bedways are induction hardened and ground for long lasting accuracy.
- An additional third bed way is provided on the front of the bed, giving extra support to the carriage during heavy cutting conditions.

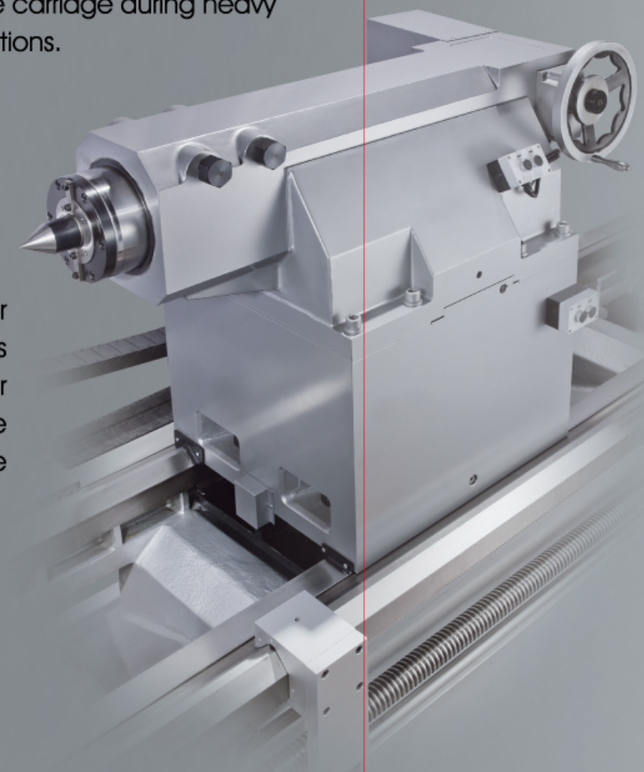

- Tailstock is equipped with a 2 step quill feed for ease of infeed. Large hand crank allows convenient positioning of tailstock. For larger models, motorized quill feed and power drive tailstock units are available as options. (picture shows optional power driven tailstock unit)

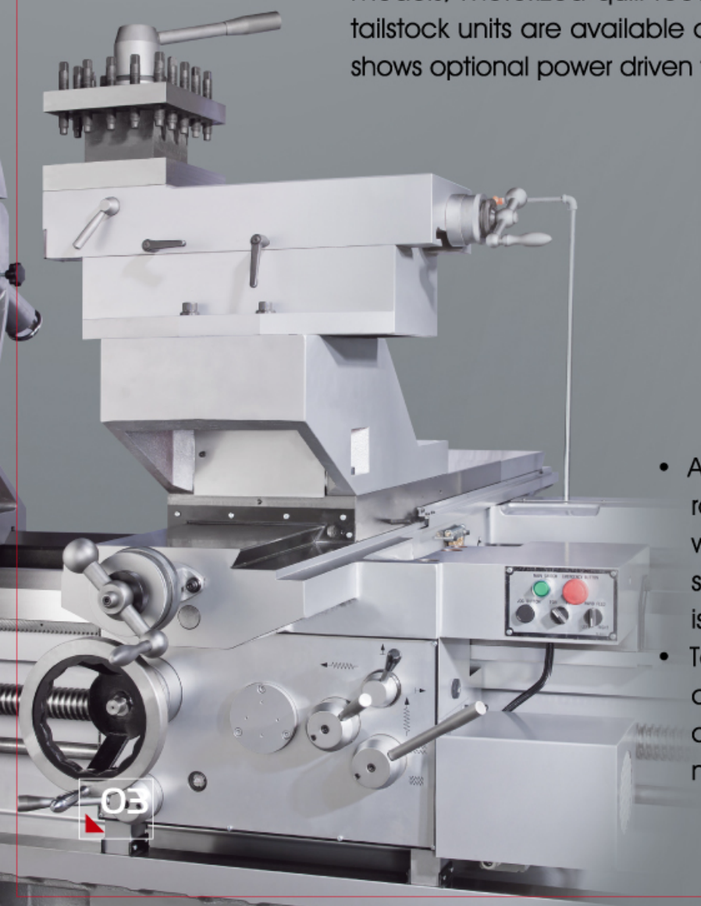

- Apron controls allow forward / reverse and rapid traverse motions of the cross slide. 4 ways and 6 ways rapid traverse on the top slide are available as options. Jog button is also located at the front of the apron.
- Top of the cross slide ways are hardened and ground, underside of the slide ways are Turcite coated for wear resistant movement along the bed ways.

- The headstock casting is designed with 3 point bearing support for the full length of the alloy steel precision spindle shaft.
- Spindle bore sizes are available in 6", 9" and 12" Double chucks are available as options.
- Gears and shafts are made from hardened and ground alloy steel, the spindle is made from forged, chrome alloy material.
- Fully enclosed quick change gear box allows easy change of wide range of inch, metric, MP and DP threads without exchanging gears. Coarse Inch thread is available up to 1/4 TPI.

Specifications	4060M	4060M-32	5060M	5060M-32	6060M	6060M-32	7080M	7080M-32	8080M-32
CAPACITY									
Swing over bed	40"	40"	50.4"	50.4"	60.2"	60.2"	70.9"	70.9"	80.3"
Swing over cross slide	27.9"	24.0"	38.2"	34.2"	40"	44.9""	58.7"	54.7"	64.2"
Swing over gap	57"	51.1"	67.3"	61.4"	77.2"	71.3"	87.8"	81.9"	91.3"
Width of gap (spindle face)	22.4"	23.4"	22.4"	23.4"	22.4"	23.4"	22.4"	23.4"	23.4"
Distance between centers	60"	60"	60"	60"	60"	60"	80"	80"	80"
Opt. Centers Distance (in)	80,120,160,200,240	80,120,160,200,240	80,120,160,200,240	80,120,160,200,240	80,120,160,200,240	80,120,160,200,240	120,160,200,240,315	120,160,200,240,315	120,160,200,240,315
BED									
Width of bed	24"	32"	24""	32"	24"	32"	24"	32"	32"
Length of bed	133"	153"	133"	153"	133"	153"	154"	173"	173"
Opt. Bed length	154"- 311"	173"- 330"	173"- 330"	173"- 330"	154"- 390"	173"- 409"	193"- 390"	212"- 409"	212"- 409"
HEADSTOCK									
Spindle bore	6"	6"	6"	6"	6"	6"	6"	6"	6"
Optional Spindle Bore	9", 12"	9", 12"	9", 12"	9", 12"	9", 12"	9", 12"	9", 12"	9", 12"	9", 12"
6" bore Spindle speed range	4 - 420 rpm	4 - 420 rpm	4 - 420 rpm	4 - 420 rpm	4 - 420 rpm	4 - 420 rpm	4 - 420 rpm	4 - 420 rpm	4 - 420 rpm
9", 12" bore Spindle speed range	7 - 266 rpm	7 - 266 rpm	7 - 266 rpm	7 - 266 rpm	7 - 266 rpm	7 - 266 rpm	7 - 266 rpm	7 - 266 rpm	7 - 266 rpm
6" bore Spindle speed number	16	16	16	16	16	16	16	16	16
9", 12" bore speed number	12	12	12	12	12	12	12	12	12
Spindle nose	A2-11	A2-11	A2-11	A2-11	A2-11	A2-11	A2-11	A2-11	A2-11
9" bore spindle nose	A2-15	A2-15	A2-15	A2-15	A2-15	A2-15	A2-15	A2-15	A2-15
12" bore spindle nose	A2-20	A2-20	A2-20	A2-20	A2-20	A2-20	A2-20	A2-20	A2-20
CARRIAGE									
Cross slide travel	23.6"	27.6"	23.6"	27.6"	23.6"	27.6"	23.6"	27.6"	27.6"
Compound rest travel	14.6"	15.8"	14.6"	15.8"	14.6"	15.8"	14.6"	15.8"	15.8"
Width of carriage	31.5"	34.7"	31.5"	34.7"	31.5"	34.7"	31.5"	34.7"	34.7"
Max. cutting tool size	1.57" x 1.57"	1.57" x 1.57"	1.57" x 1.57"	1.57" x 1.57"	1.57" x 1.57"	1.57" x 1.57"	1.57" x 1.57"	1.57" x 1.57"	1.57" x 1.57"
THREADS									
Inch threads	0.25-30 TPI (70)	0.25-30 TPI (70)	0.25-30 TPI (70)	0.25-30 TPI (70)	0.25-30 TPI (70)	0.25-30 TPI (70)	0.25-30 TPI (70)	0.25-30 TPI (70)	0.25-30 TPI (70)
Metric threads	1-120 mm (62)	1-120 mm (62)	1-120 mm (62)	1-120 mm (62)	1-120 mm (62)	1-120 mm (62)	1-120 mm (62)	1-120 mm (62)	1-120 mm (62)
Diametral threads	1-120 DP (70)	1-120 DP (70)	1-120 DP (70)	1-120 DP (70)	1-120 DP (70)	1-120 DP (70)	1-120 DP (70)	1-120 DP (70)	1-120 DP (70)
Module thread	0.25-30 M (53)	0.25-30 M (53)	0.25-30 M (53)	0.25-30 M (53)	0.25-30 M (53)	0.25-30 M (53)	0.25-30 M (53)	0.25-30 M (53)	0.25-30 M (53)
Leadscrew diameter & pitch	2.36"dia., 2 TPI	2.36"dia., 2 TPI	2.36"dia., 2 TPI	2.36"dia., 2 TPI	2.36"dia., 2 TPI	2.36"dia., 2 TPI	2.36"dia., 2 TPI	2.36"dia., 2 TPI	2.36"dia., 2 TPI
FEEDS									
Longitudinal feeds	.0024 - .28 ipr	.0024 - .28 ipr	.0024 - .28 ipr	.0024 - .28 ipr	.0024 - .28 ipr	.0024 - .28 ipr	.0024 - .28 ipr	.0024 - .28 ipr	.0024 - .28 ipr
Longitudinal rapid traverse	82.6 ipm	82.6 ipm	82.6 ipm	82.6 ipm	82.6 ipm	82.6 ipm	82.6 ipm	82.6 ipm	82.6 ipm
Cross feeds	.0012 - .14 ipr	.0012 - .14 ipr	.0012 - .14 ipr	.0012 - .14 ipr	.0012 - .14 ipr	.0012 - .14 ipr	.0012 - .14 ipr	.0012 - .14 ipr	.0012 - .14 ipr
Cross rapid traverse	41.3 ipm	41.3 ipm	41.3 ipm	41.3 ipm	41.3 ipm	41.3 ipm	41.3 ipm	41.3 ipm	41.3 ipm
Feed rod diameter	1.26"	1.26"	1.26"	1.26"	1.26"	1.26"	1.26"	1.26"	1.26"
TAILSTOCK									
Quill travel	12"	12"	12"	12"	12"	12"	12"	12"	12"
Quill taper	MT #6	MT #6	MT #6	MT #6	MT #6	MT #6	MT #6	MT #6	MT #6
Quill diameter	4.53"	7.88"	4.53"	7.88"	4.53"	7.88"	4.53"	7.88"	7.88"
MOTOR									
Main motor	30 HP	30 HP	30 HP	30 HP	30 HP	30 HP	30 HP	30 HP	30 HP
Optional motor	40 HP, 50 HP	40 HP, 50 HP	40 HP, 50 HP	40 HP, 50 HP	40 HP, 50 HP	40 HP, 50 HP	40 HP, 50 HP	40 HP, 50 HP	40 HP, 50 HP
Rapid motor	1 HP	1 HP	1 HP	1 HP	1 HP	1 HP	1 HP	1 HP	1 HP
Coolant motor	1/8 HP	1/8 HP	1/8 HP	1/8 HP	1/8 HP	1/8 HP	1/8 HP	1/8 HP	1/8 HP
GROSS WT. (approx.)	19,000 lbs	22,000 lbs	20,900 lbs	24,900 lbs	22,200 lbs	26,000 lbs	23,800 lbs	27,200 lbs	34,100 lbs
Longer centers gross wt.	see dimensions chart	see dimensions chart	see dimensions chart	see dimensions chart	see dimensions chart	see dimensions chart	see dimensions chart	see dimensions chart	see dimensions chart
Dimensions	161 x 80 x59"	187 x 85 x 61"	161 x 80 x 64"	186 x 85 x 66"	161 x 81 x 69"	187 x 85 x 71"	161 x 81 x 74"	187 x 85 x 76"	187 x 85 x 81"
Longer centers dimensions	see dimensions chart	see dimensions chart	see dimensions chart	see dimensions chart	see dimensions chart	see dimensions chart	see dimensions chart	see dimensions chart	see dimensions chart

* Proper foundation and environmental controls are required.
***All Prices and Specifications Subject to Change without Notice. Please Verify.